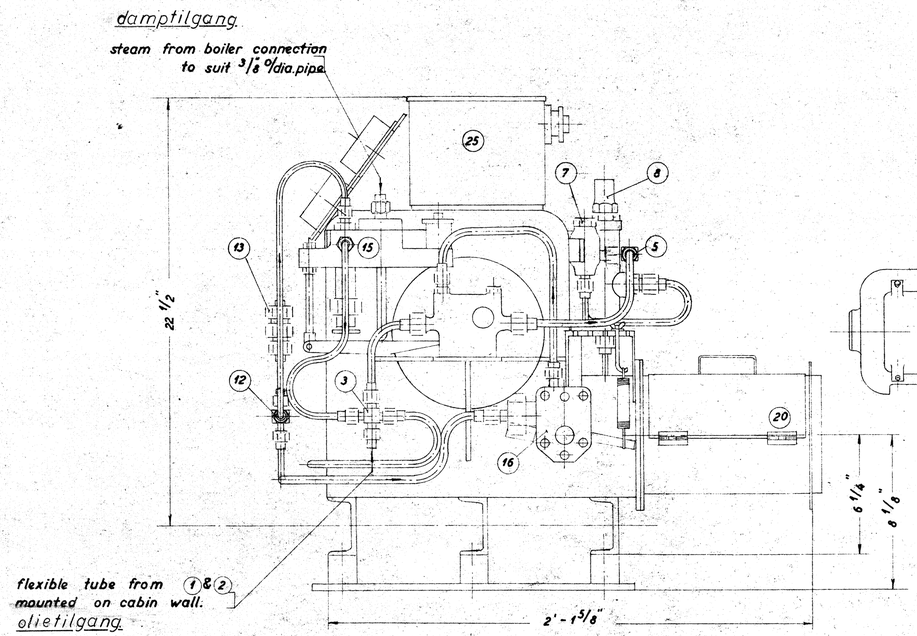

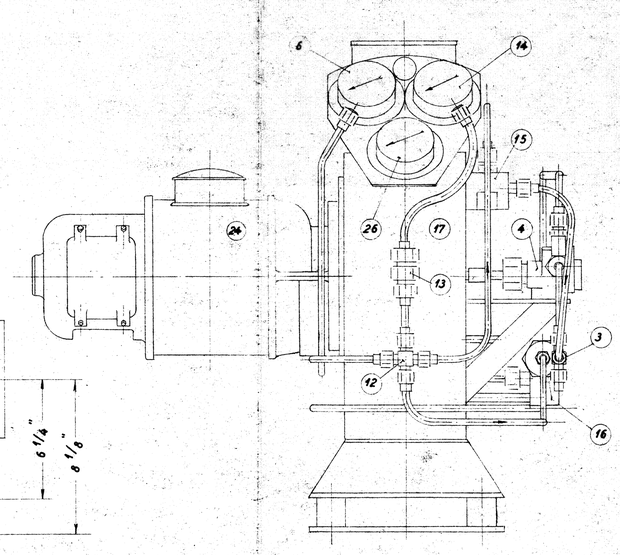

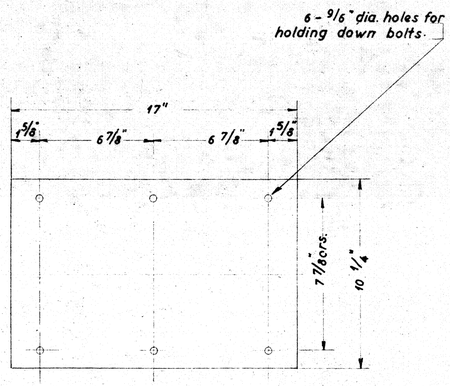

detail of holes in baseplate

supplied by clients
5 mm thk. m.s.plate.

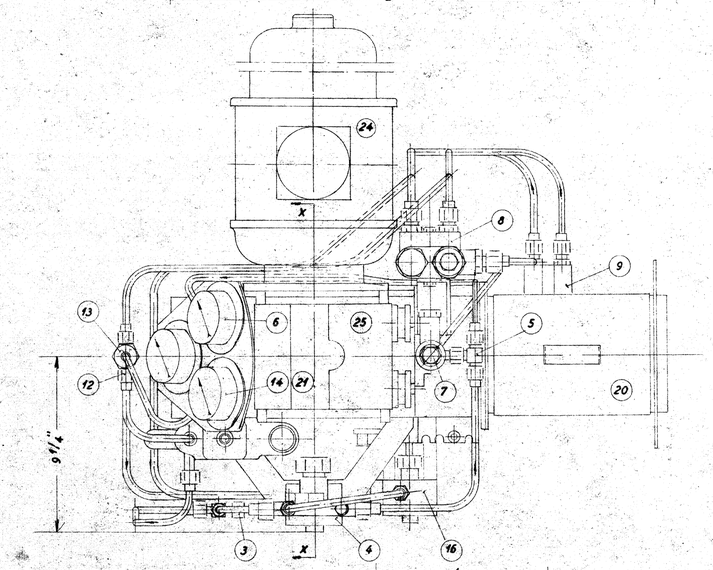

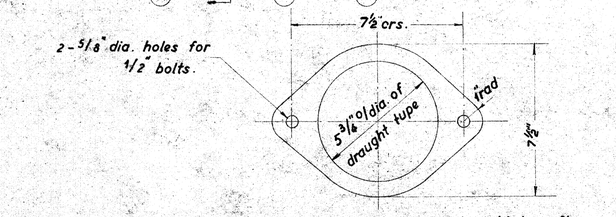

position of bolts on draught tube flange

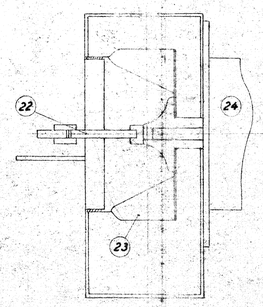

section thro. x.x.

List of parts.

Ref.nr.	Description	Bore.	Part nr.	Material.	Drg. nr.	Remarks.
1	oilsuction valve	3/8 BSP.		gunmetal	-	fig. nr. 227.
2	oilsuction strainer	1/4"		burnermetal	H.S. 43837.	type "Pkt."
3	oilsuction cross piece	3/8 BSP.		brass	-	conn. AX.
4	oil circulating pump			burnermetal	P.P. 48237	type 1" P.
5	oil delivery line tee piece	1/4" 1/4" 1/4"		"		conn. R.J.
6	" " " pressure gauge			various.		3" dial. 0-18 kgs/cm²
7	" " " strainer	1/4"		burnermetal	H.S. 46885	type "S"
8	" " " double shut-off & relief valve Mk 3			"	V.E. 49374	
9	quick release manifold	1/4"		"	O. 46143/1	
10	oil burner			various	O. 46143.	
11	quick release mechanism			mild steel	O. 46143.	
12	oil return cross piese	3/8 BSP.		brass		conn. AX.
13	pressure gauge vibration suppressdr			"	F.W.S. 48 77	
14	oil return pressure gauge			various		3" dial. 0-14 kgs/cm².
15	auto pressure control valve			burnermetal	V.E. 47323.	
16	air damper conlrol valve	1/4"		"	V.E. 47305.	
17	fan casing			mild steel	O. 49230	
18	draught tube			" "	O. 49230.	
19	air director			" "	O. 46131.	
20	inspection door			" "	O. 49230.	
21	nameplate			burnermetal		
22	spring drive			various	492 27	"P.P." type
23	fan impeller			"		fan boss 60 drg nr 46126 fan impellor nr 7 1/2 climax
24	electric motor			"		
25	ignition coil			"		O.P. 106.
26	feed water pressuregauge			"		3 dial 0-5 kgs/cm².

Laidlaw Drew & Co. tegn. nr. 049249

Stk.	Betegnelse	Pos.	Materiale kvalitet	Model nr. eller materiale størrelse	Ia	Færdig vægt/stk
		5				
		4				
		3				
		2				
		1				

Tegn. Rev. Afd.
Kalk. VTD 29-4-49 Norm. Dato
Dato Rettelse Indeks

Målestok: 1:4

FRICHS

Anvendelse: Diesel-el. 500/550 hk motorvogn.

Stykliste nr.: ~

Tegningens benævnelse: Aut. oliefyr. P 55

Tegningens hummer: 18W-2-086

Indeks.

FRICHS nr. 147